User's manual

Cube Sauna 180-BIG

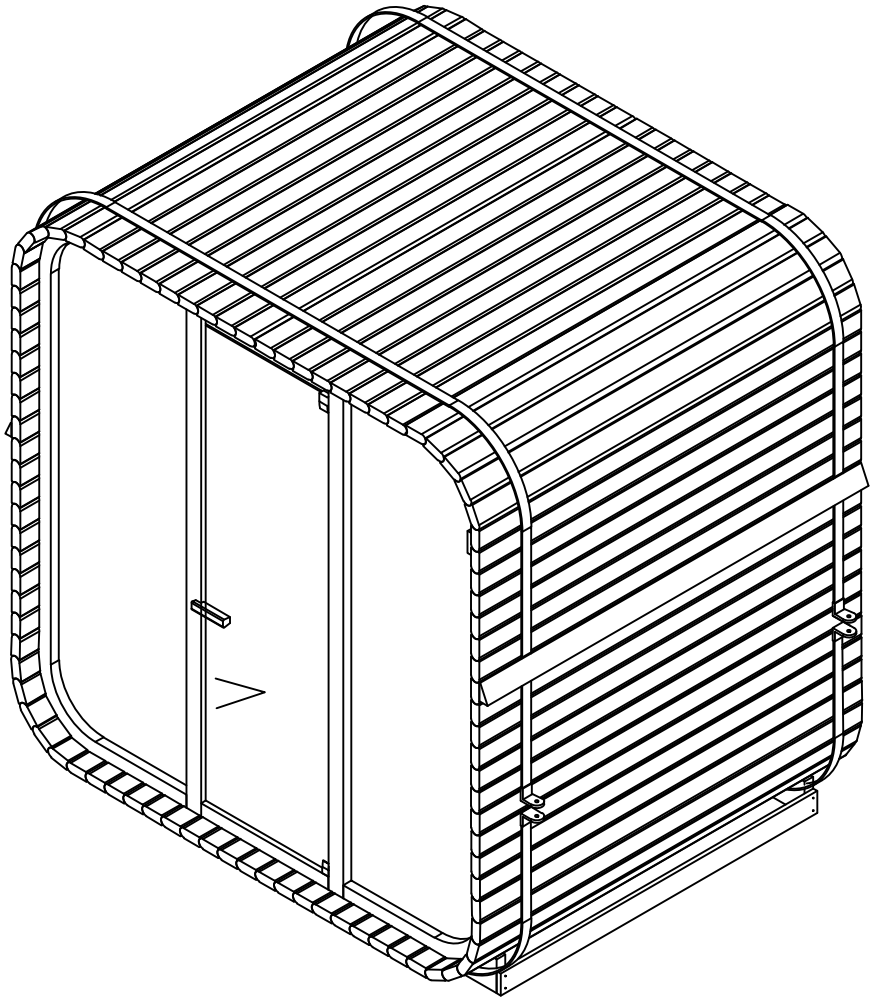

EN

PREFACE

Thank you very much for purchasing our product.
Please read this manual carefully before assembling and save it afterwards.

ATTENTION

Installation and repair should only be done by a qualified electrician!
Check power supply rating and make sure the grounded outlet is correctly connected before installation.
Use original parts only. Do not share the outlet with any other appliances.
When not in use, turn off the cabin's power unit.
Locate your cabin on a flat, level and dry surface.
There will be some smell and smoke from the sauna heater rod while starting the first time. It is normal, please keep the door open and do not use the sauna for the first starting if you can not stand the smell, please keep the sauna is on for 1 hour for the first time, we suggest you sauna while second time the stove running.
Remember,please don’t go away if the sauna is on.

DANGER

Covering the heaters causes a fire hazard due to overheating. Do not cover the heaters !
Keep flammable or easily combustible materials/objects (eg.towels) away from the heater at all times.
Do not touch the heater during and shortly after use as a burning hazard exists due to hot parts.
Should the electrical connection get damaged, it must be replaced-either by the manufacturer or by a licensed electrician!

WARNING

If you suffer from illness or other health-related problems, especially heart conditions or circulatory disturbances or if you take medication, you should consult a doctor before using the Sauna.

Children and frail persons should never be in the cabin without supervision.

If you feel uncomfortable while using the Sauna, stop immediately and consult with your doctor.

Never go to a hot Sauna if you have taken alcohol, strong medicines or narcotics.

This appliance can be used by persons with reduced physical, sensory or mental capabilities or lack of experience and knowledge if they have been given supervision or instruction concerning use of the appliance in a safe way and understand the hazards involved. Children less than 8 years shall not use the appliance, children 8 years and older shall only use the appliance when supervised. Cleaning and user maintenance shall not be made by children without supervision.

The power supply shall be fitted with an instantaneous residual current device (RCD) with $I\Delta n \leq 30$ mA.

Technical data

Model		Cube Sauna 180-BIG
Cabin material		Spruce wood
Width		2250MM
Depth		1800MM
Height		2250MM
Voltage		380V
Radiators	Type	Sauna stove
	Total output	9KW

Hardware parts (variations possible)

									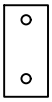	
ϕ4x30	Ø4x40	ϕ4x45	Ø4x60	ϕ5x100	Ø3*16	Ø4x12	Ø6x60	ϕ12x200	38*15*2	Ø20
10x	177x	42x	62x	26x	10x	5x	2x	2x	1x	4x

						
Ø12	Ø10.5 x Ø16	M18	Ø60*10	2x	2x	6x
4x	4x	1x	2x			

ASSEMBLE INSTRUCTIONS

Assemble tips

Please remove transport packaging and inspect that your sauna has been delivered complete and intact before beginning assemble.

A least 2 persons are required for assemble of the cabin.

Please check the countersink and hole diameter of the drill holes to avoid damaging the wood.

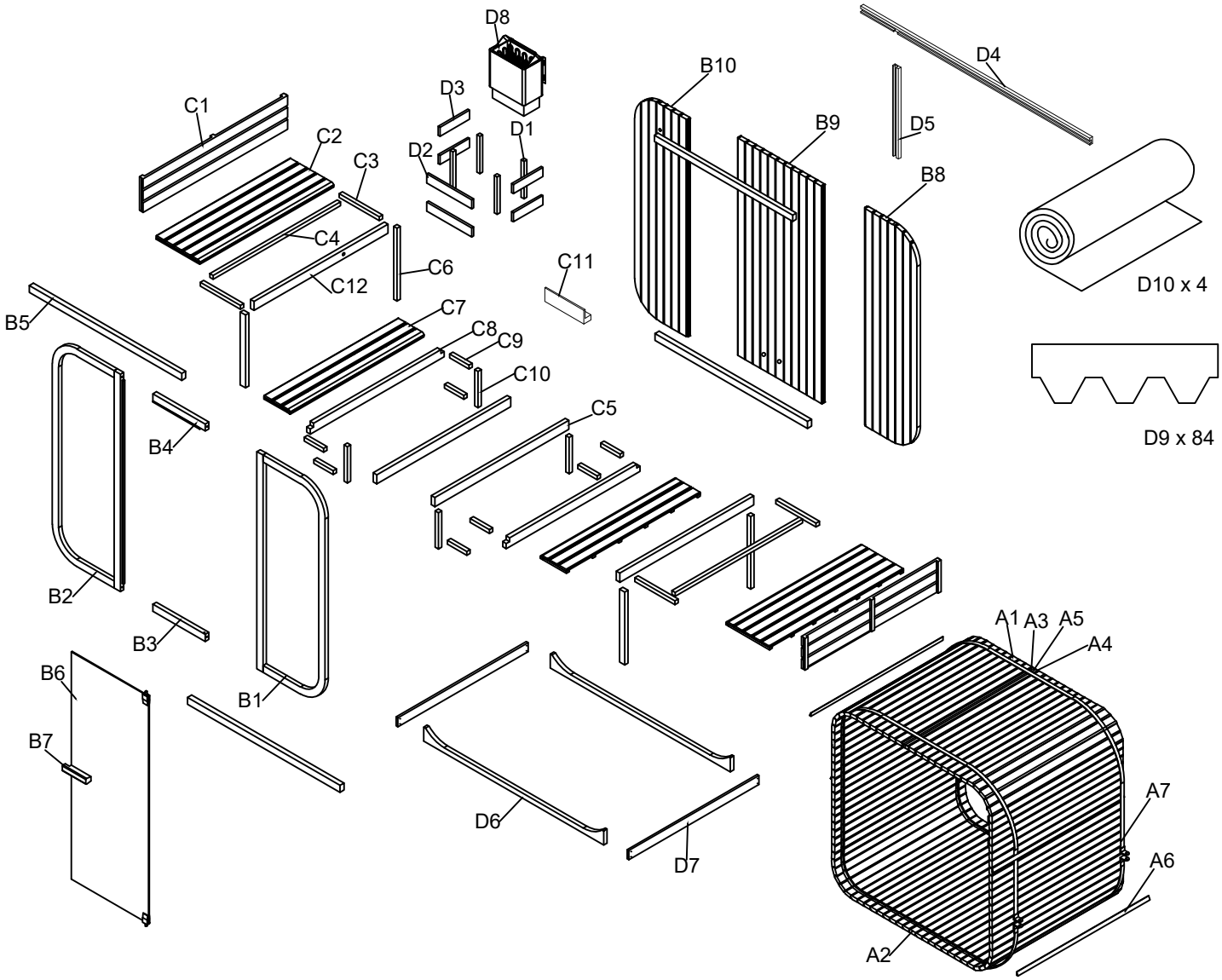
D8
D3
D1
D2
C1
C2
C3
C4
C12
C6
C11
B10
B9
D5
D4
B8
D10 x 4
D9 x 84
B5
C7
C8
C9
C10
C5
B4
B2
B3
B1
B6
B7
D6
D7
A1
A3
A5
A4
A7
A6
A2

Tools

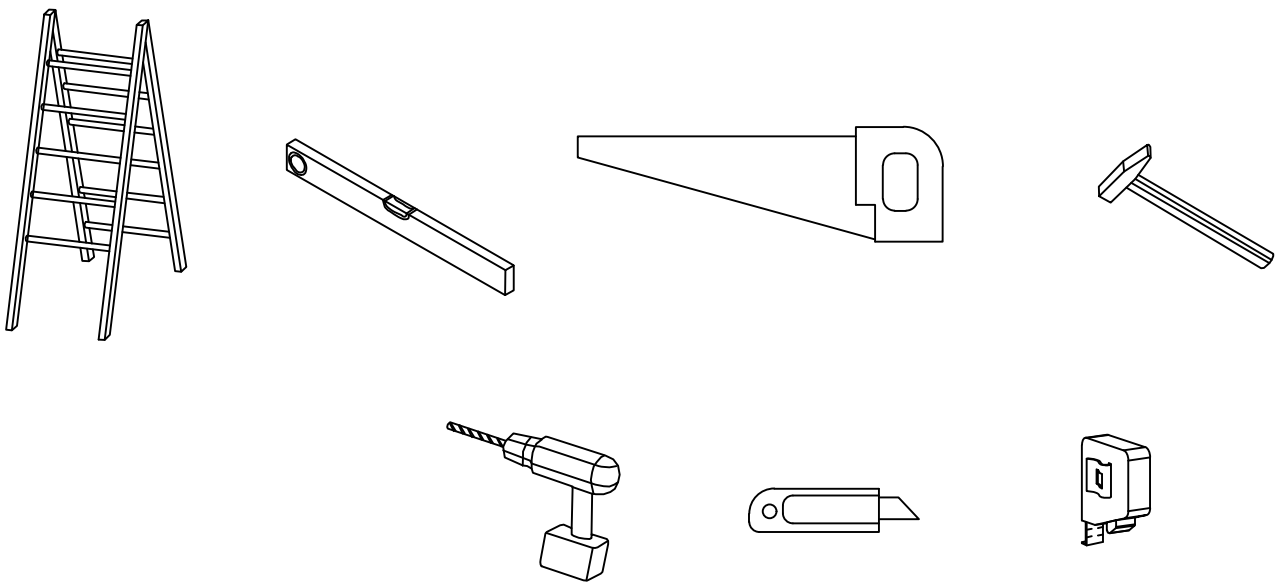

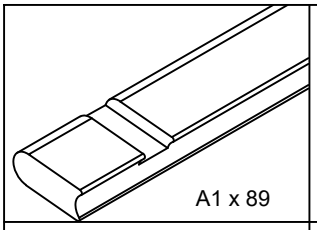 A1 x 89	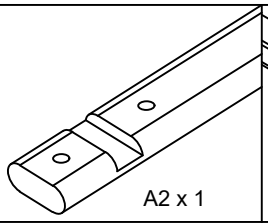 A2 x 1	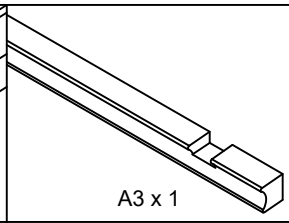 A3 x 1	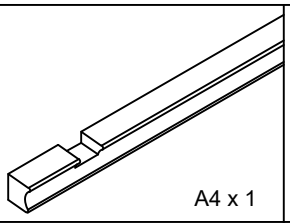 A4 x 1	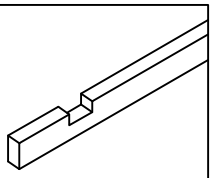 A5 x 1
1800*97*38MM	1800*97*38MM	1800*47*38MM	1800*47*38MM	1800*38*(10)(20)(30)MM
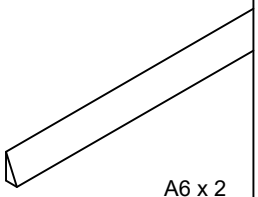 A6 x 2	 A7 x 2	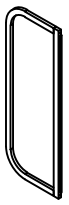 B1 x 1	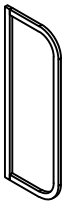 B2 x 1	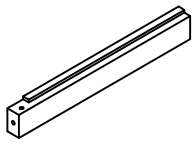 B3 x 1
1800*90*38MM	8230*40*4MM	2158*793*38MM	2158*780*38MM	600*103*38MM
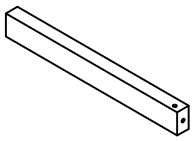 B4 x 1	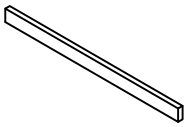 B5 x 4	 B6 x 1	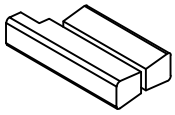 B7 x 1	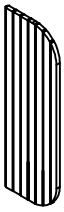 B8 x 1
600*90*38MM	1500*33*20MM	1963*595*8MM	300*80*40MM 252*80*40MM	2158*606*38MM
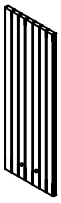 B9 x 1	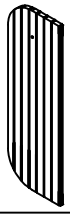 B10 x 1	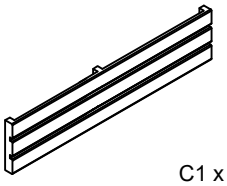 C1 x 2	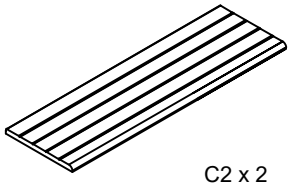 C2 x 2	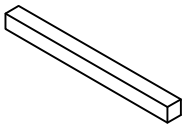 C3 x 4
2158*967*38MM	2158*606*38MM	1535*300*38MM	1535*478*38MM	438*38*38MM
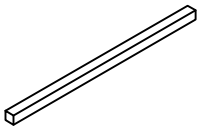 C4 x 2	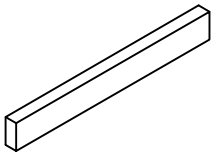 C5 x 3	 C6 x 4	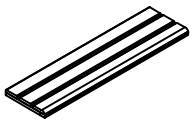 C7 x 2	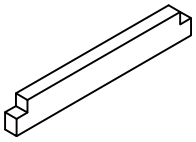 C8 x 2
1459*38*38MM	1535*90*38MM	722*70*38MM	1535*300*38MM	1535*90*38MM
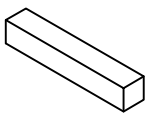 C9 x 8	 C10 x 4	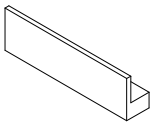 C11 x 1	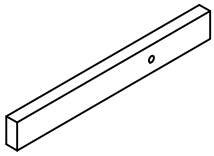 C12 x 1	 D1 x 4
222*38*38MM	360*38*38MM	300*90*55MM	1535*90*38MM	330*33*33MM
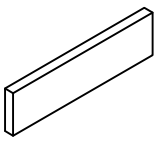 D2 x 2	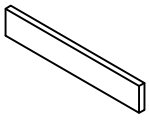 D3 x 4	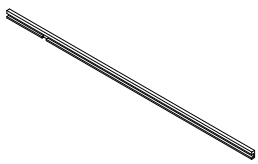 D1 x 1	 D2 x 1	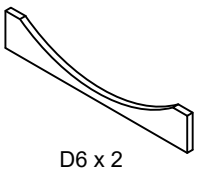 D6 x 2
570*90*20MM	360*90*20MM	2120*45*20MM	600*45*20MM	2064*140*38MM
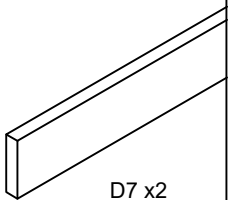 D7 x2	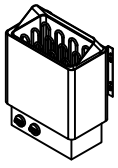 D8 x 1	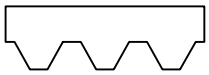 D9 x 56	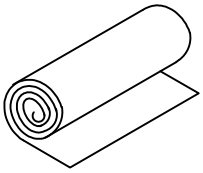 D10 x 4	
1492*90*20MM	Sauna stove	1010*320MM	1000*1820MM	3 /12

Assemble steps

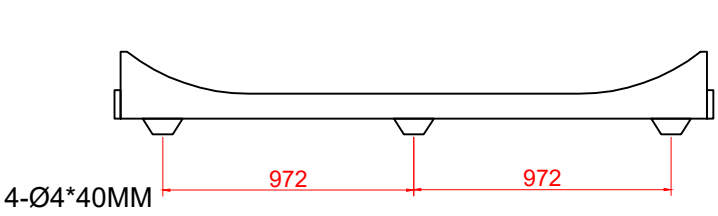

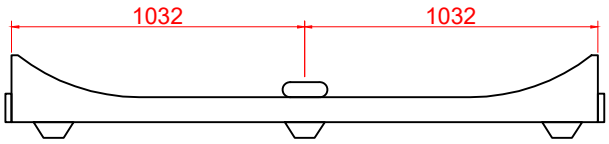

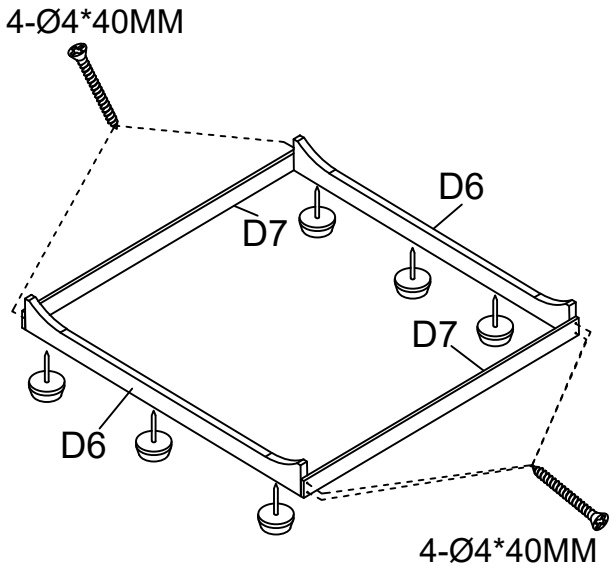

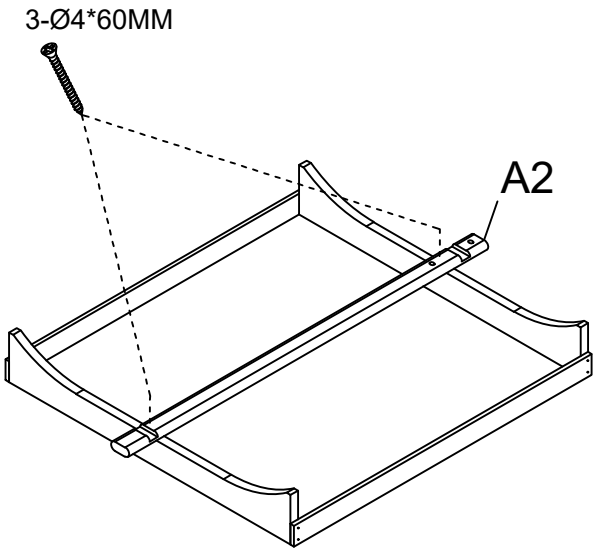



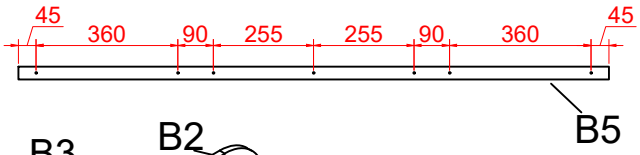

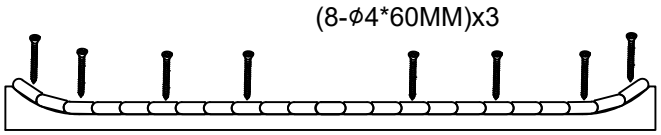

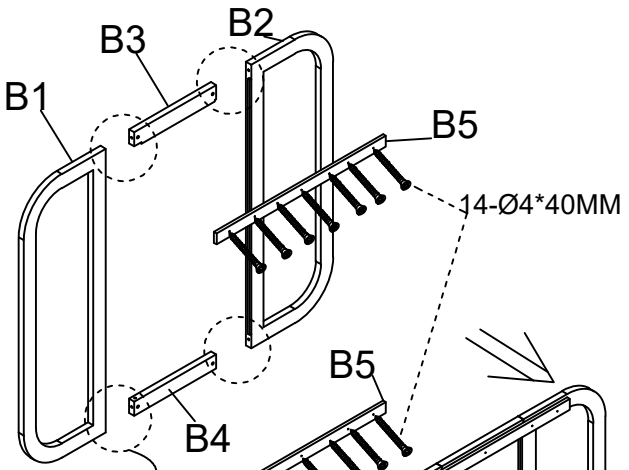

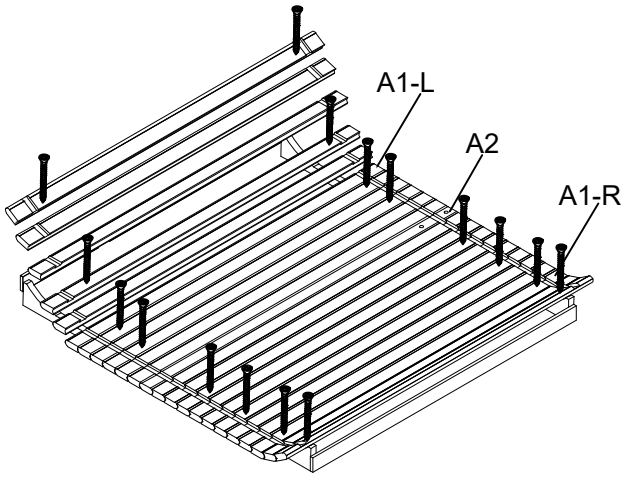

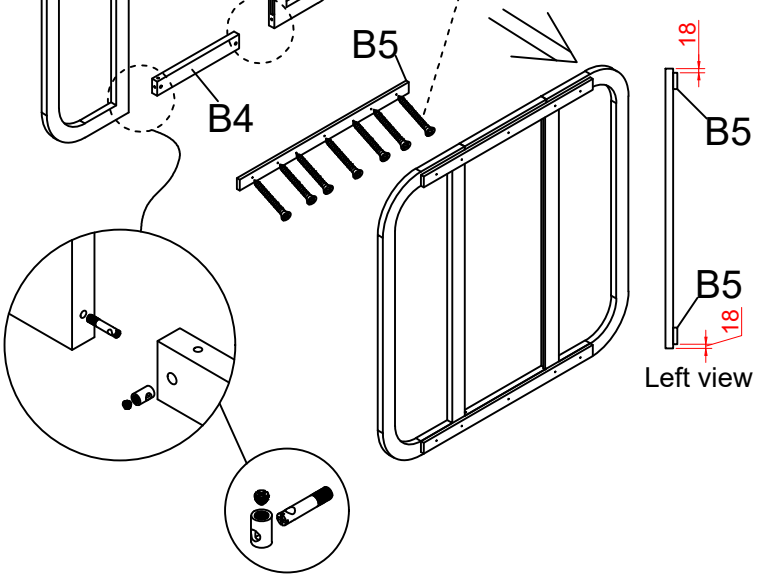

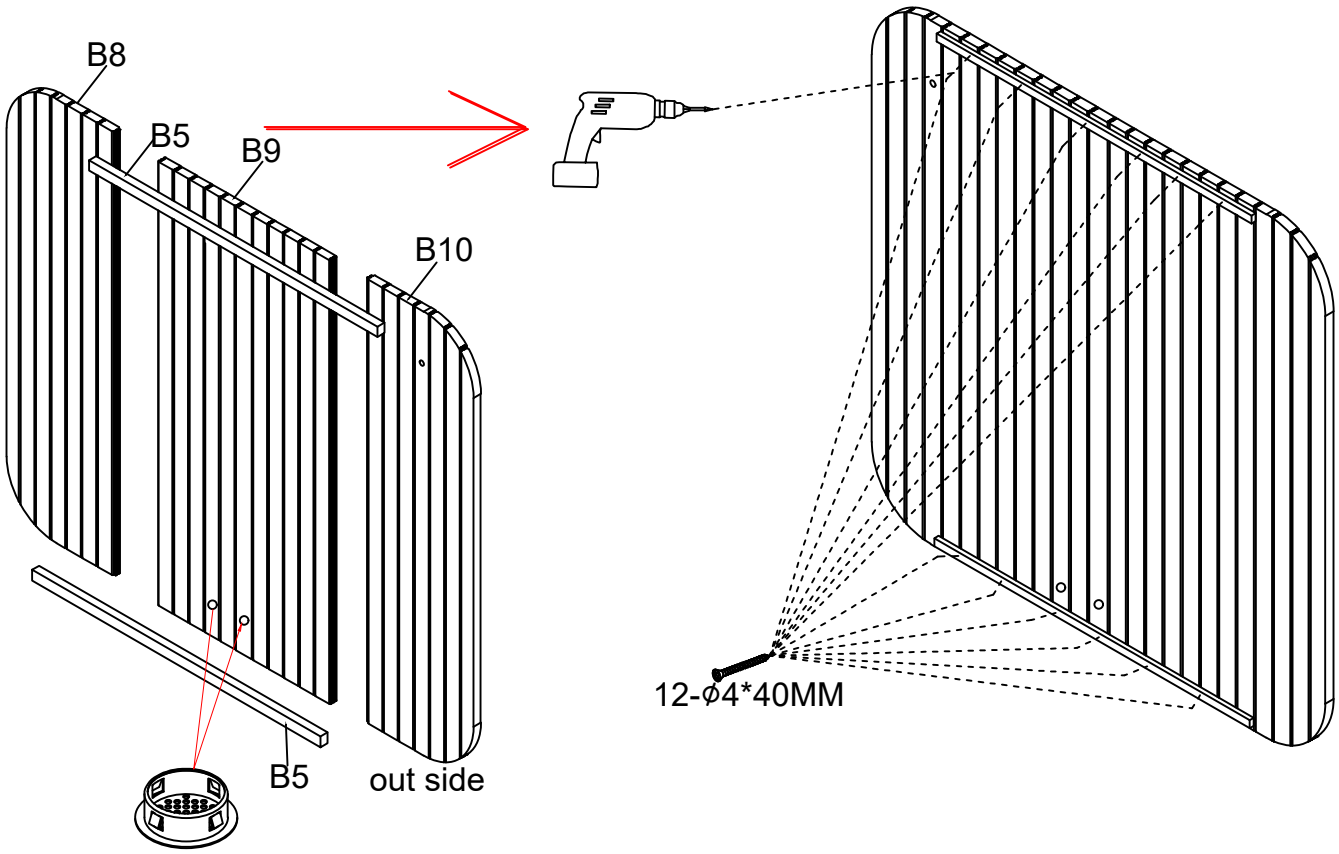
B8
B5
B9
B10
B5
out side
12-φ4*40MM

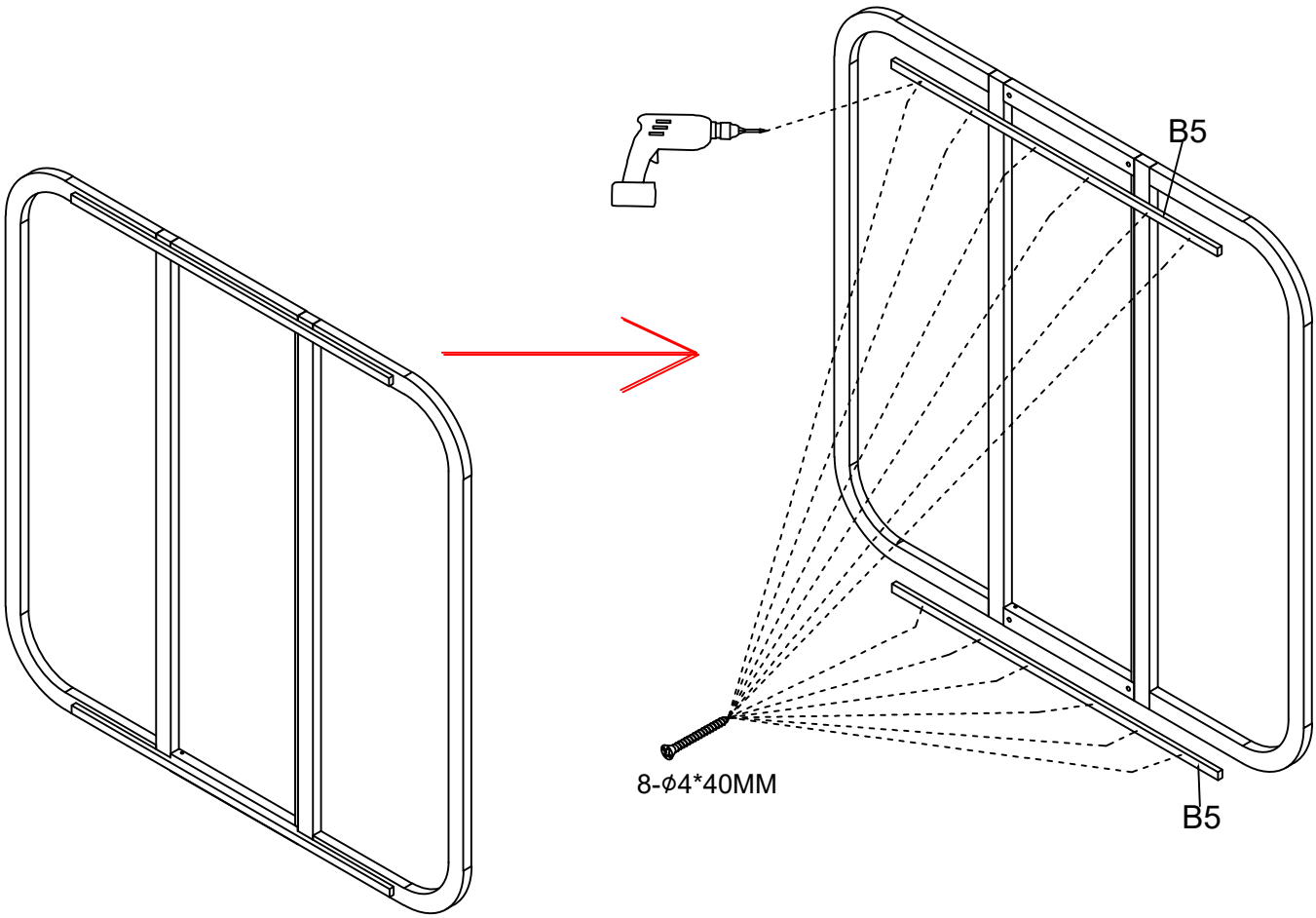
B5
8-φ4*40MM
B5

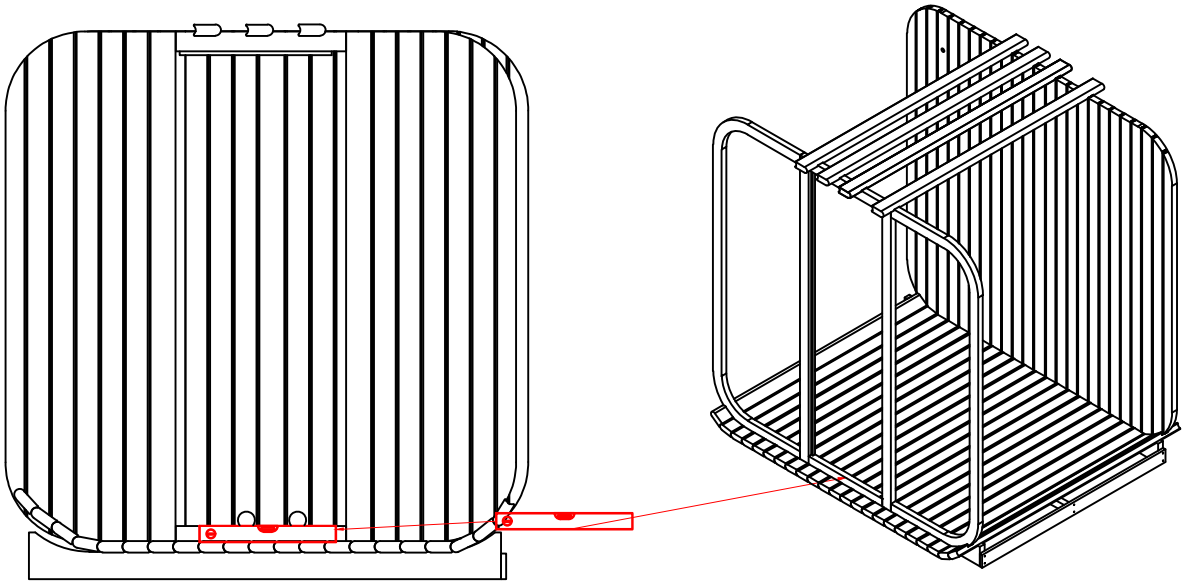

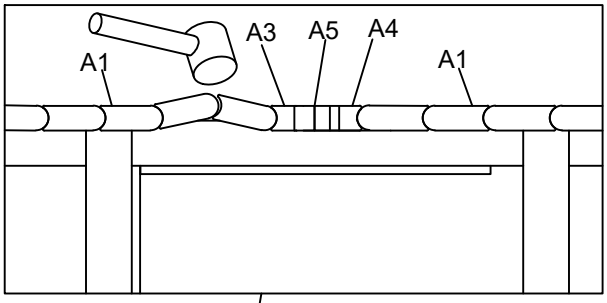
A1
A3
A5
A4
A1

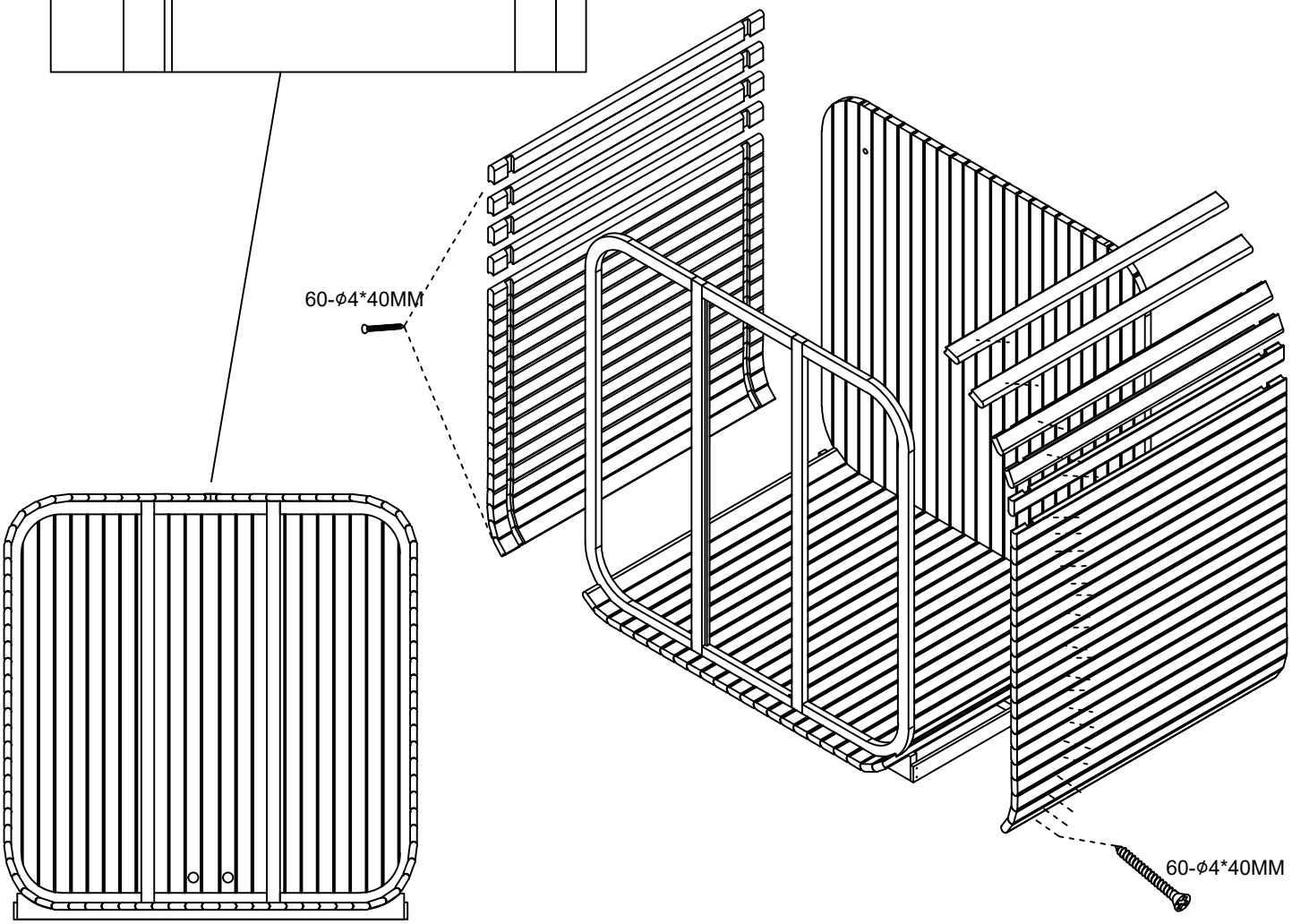
60-ϕ4*40MM
60-ϕ4*40MM

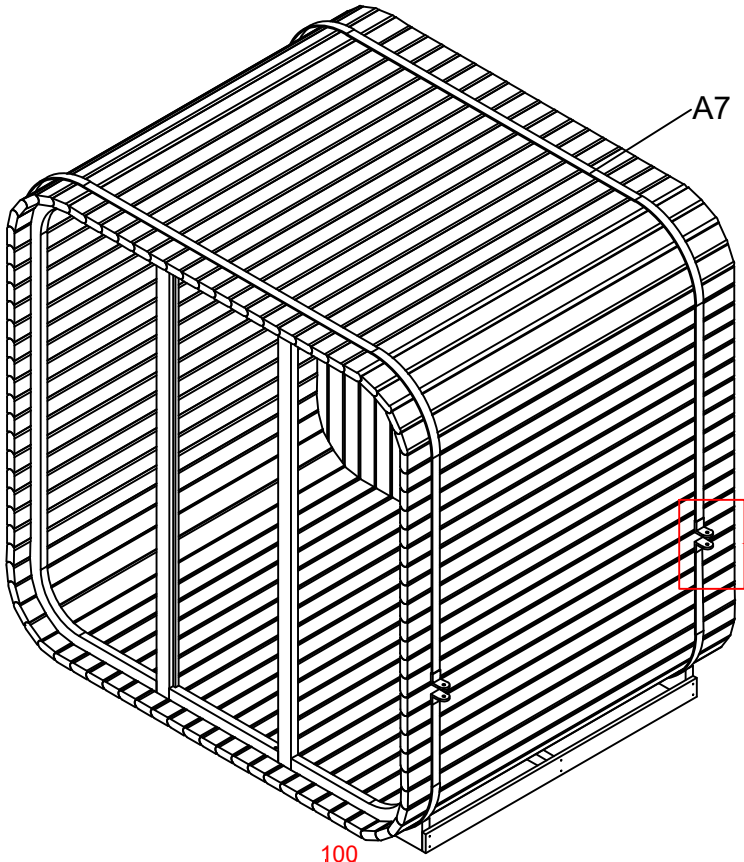

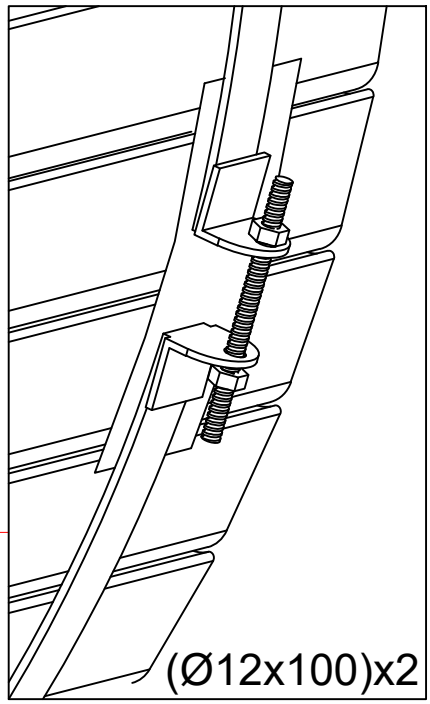

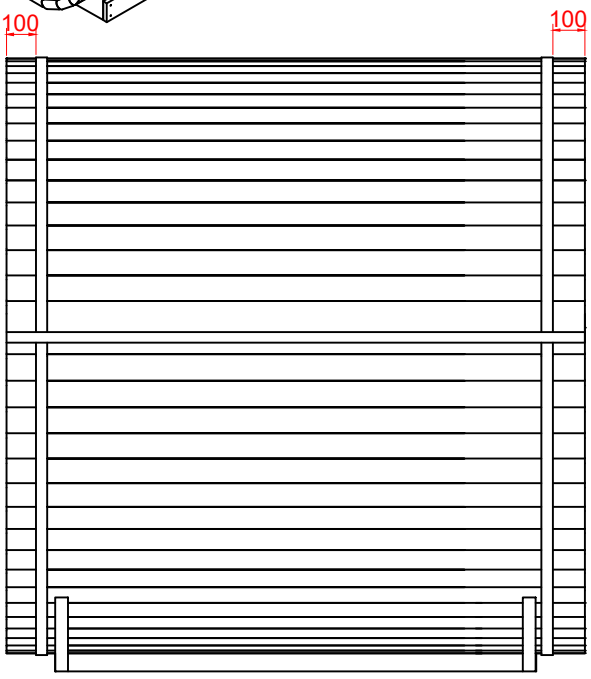

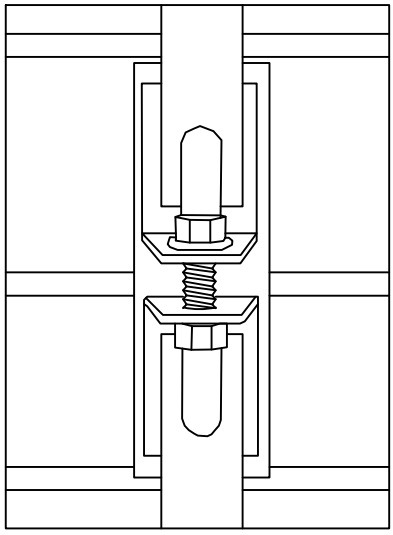

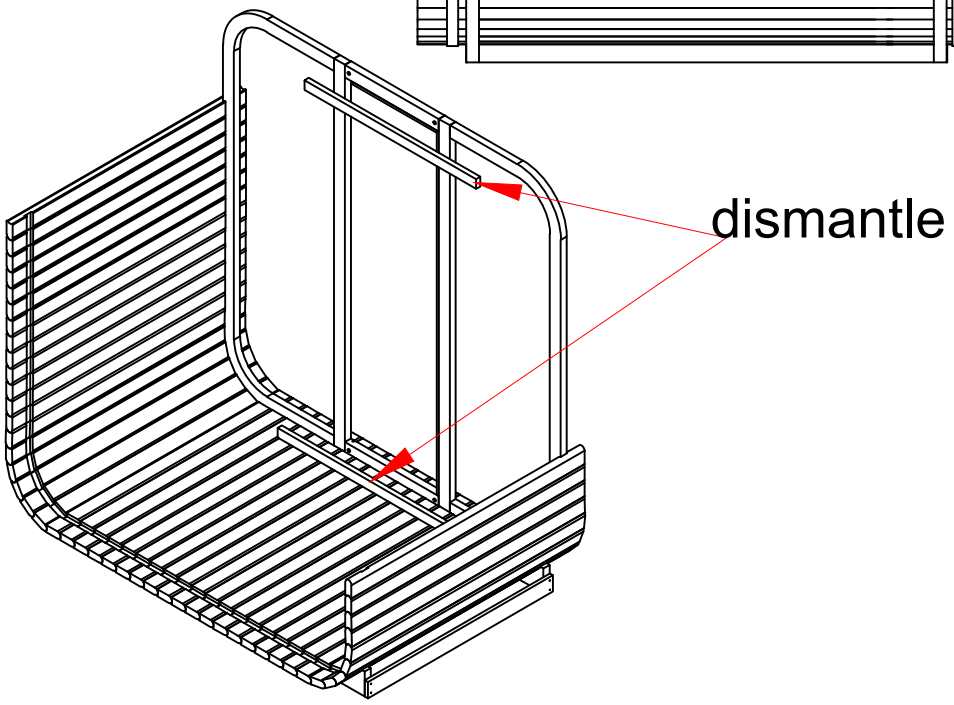

M12	Ø12/Ø24	Ø12	60x200 x0,5
4x	4x	4x	4x

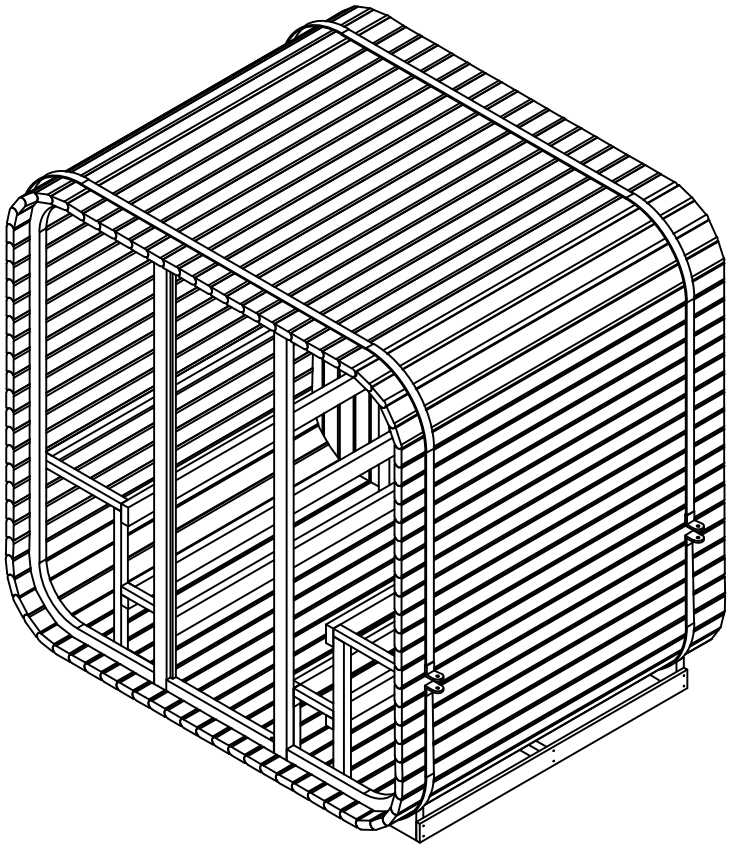

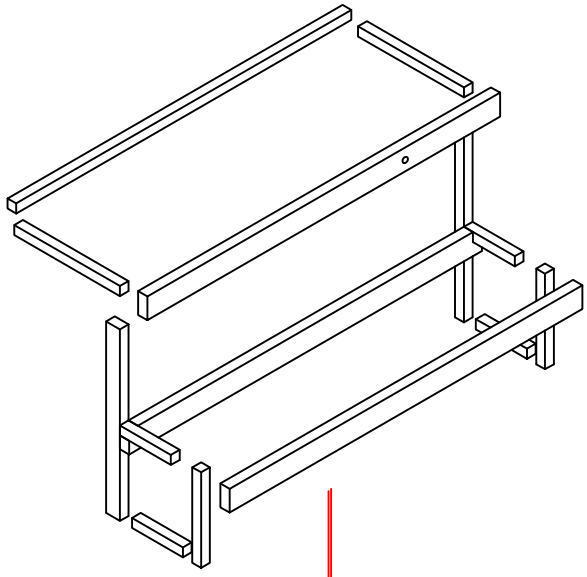

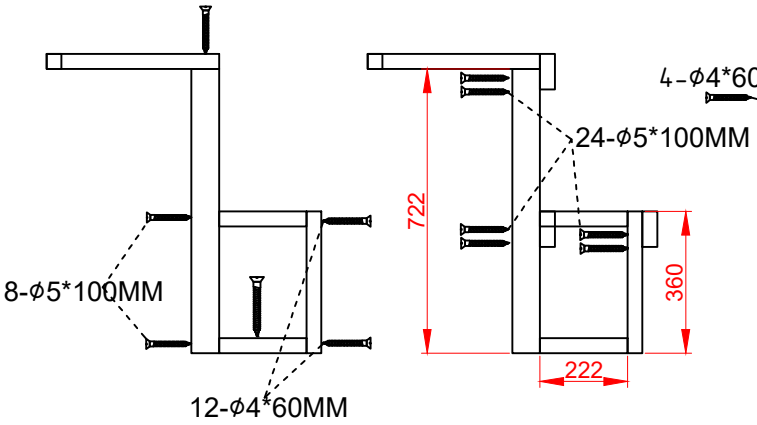
8-φ5*100MM
12-φ4*60MM
24-φ5*100MM
722
360
222

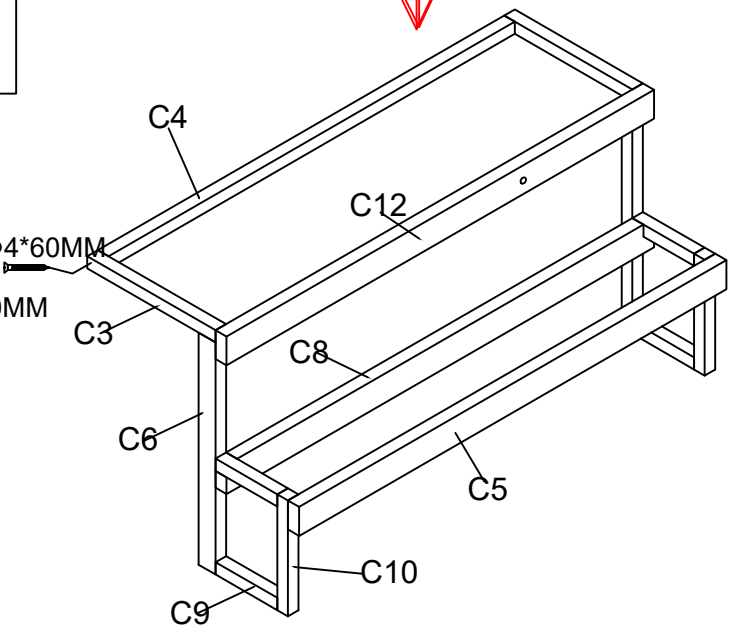
C4
C12
4-φ4*60MM
C3
C8
C6
C5
C10
C9

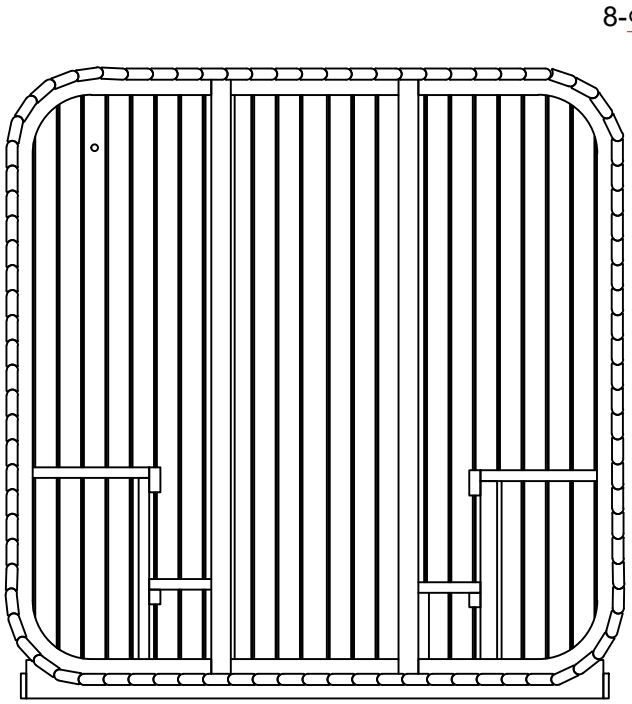

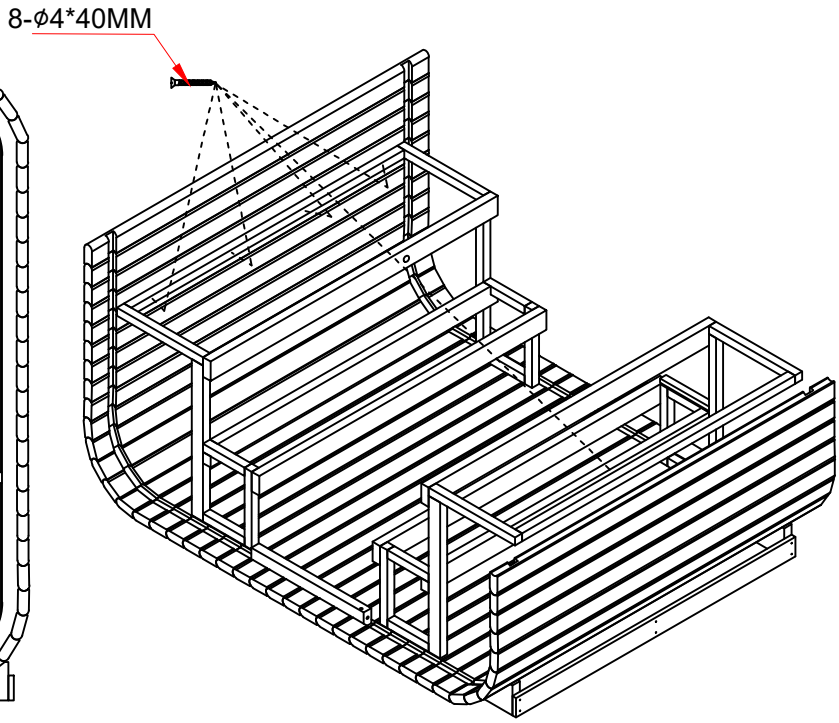
8-φ4*40MM

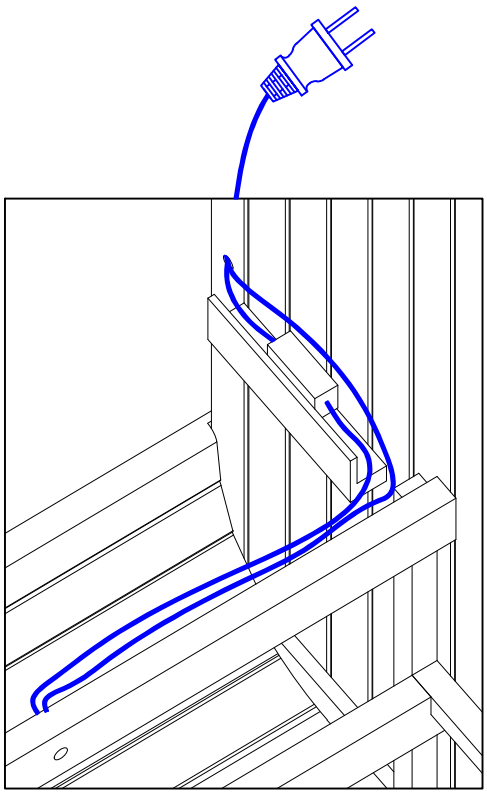

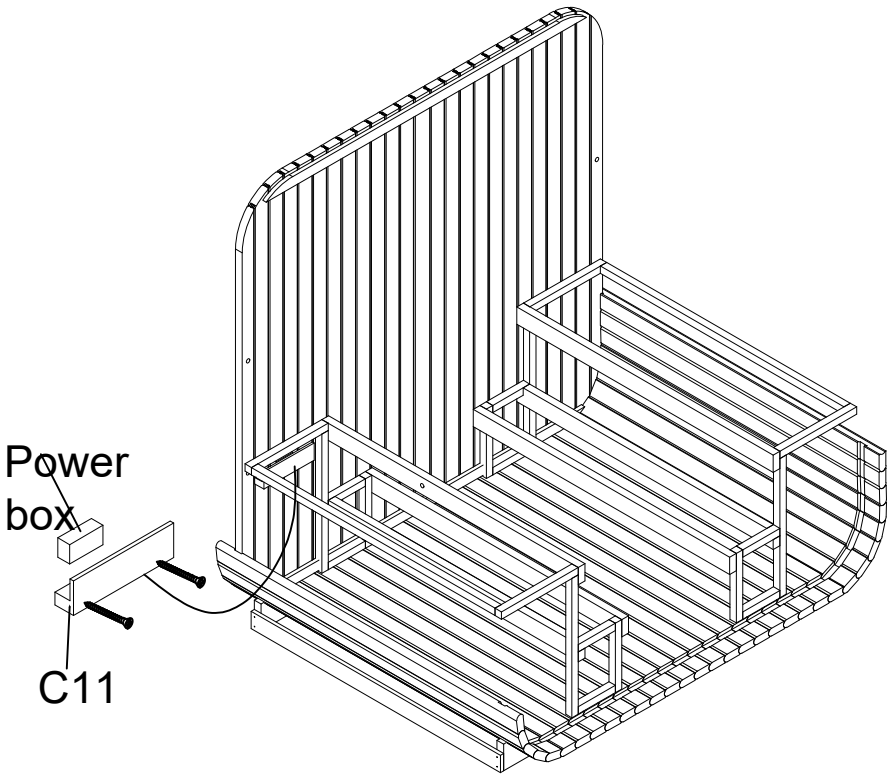
Power
box
C11

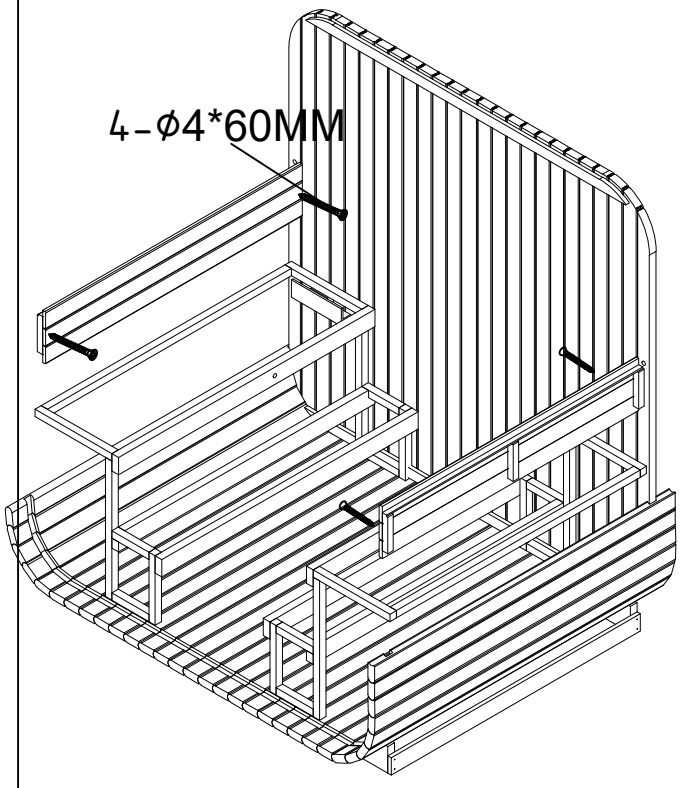
4-φ4*60MM

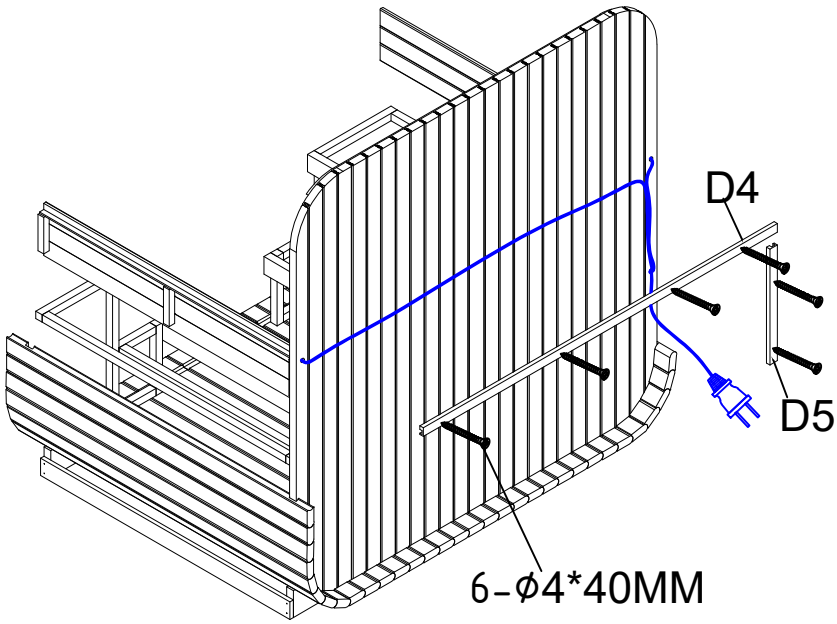
D4
D5
6-φ4*40MM

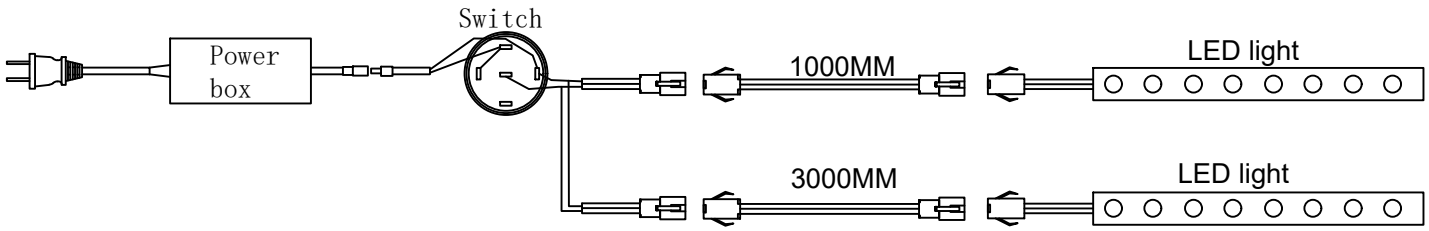
Power
box
Switch
1000MM
LED light
3000MM
LED light

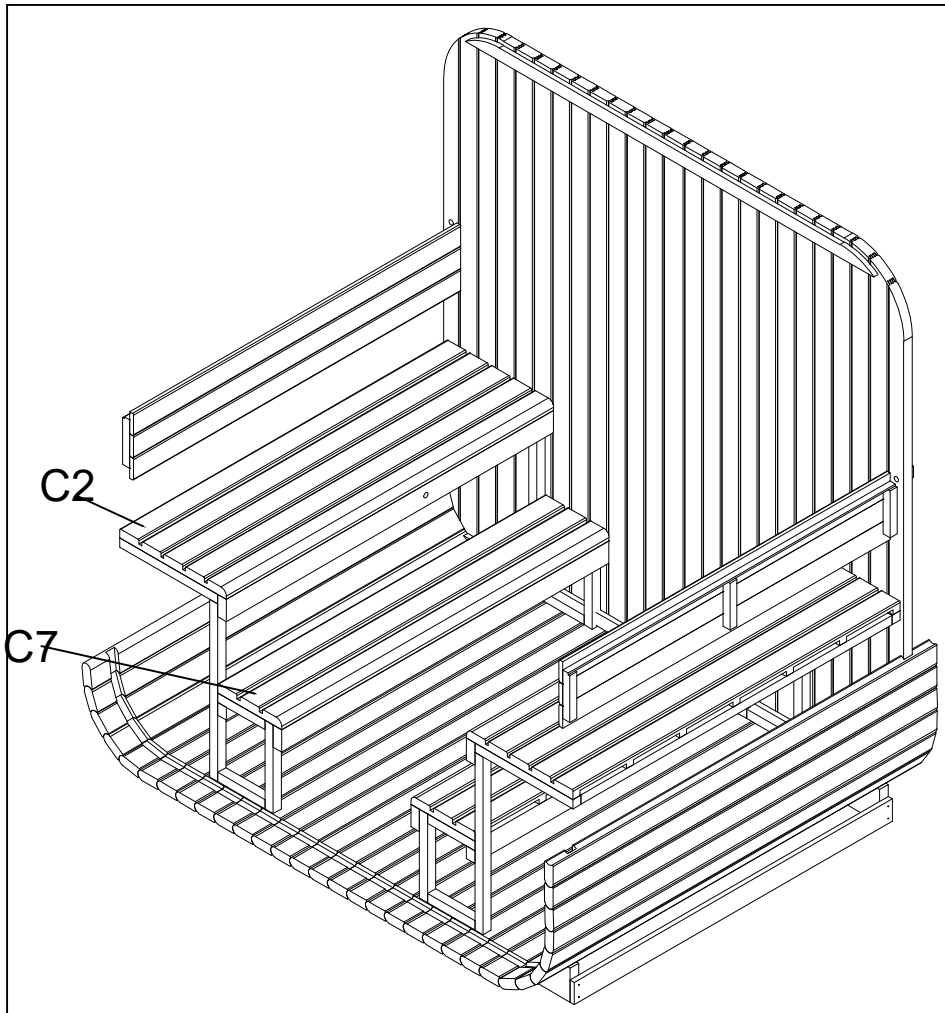
C2
C7

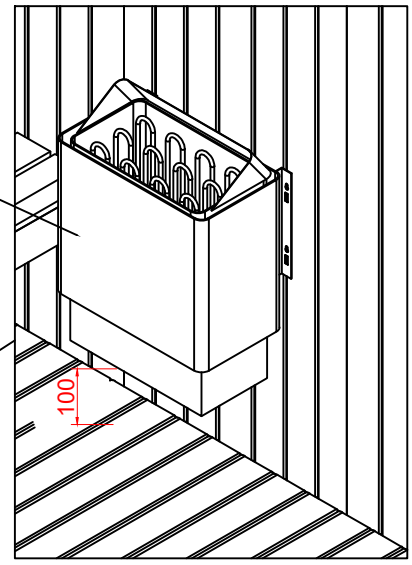
D8
100

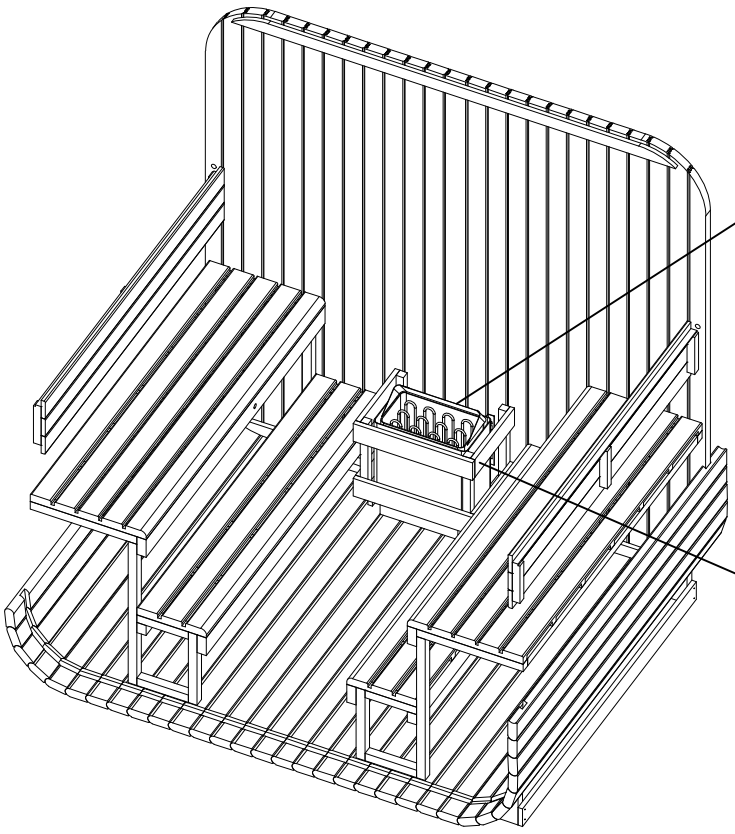

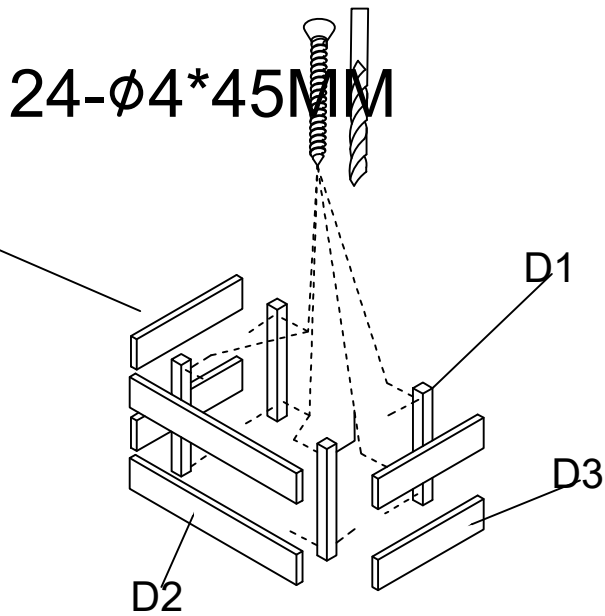
24-φ4*45MM
D1
D3
D2

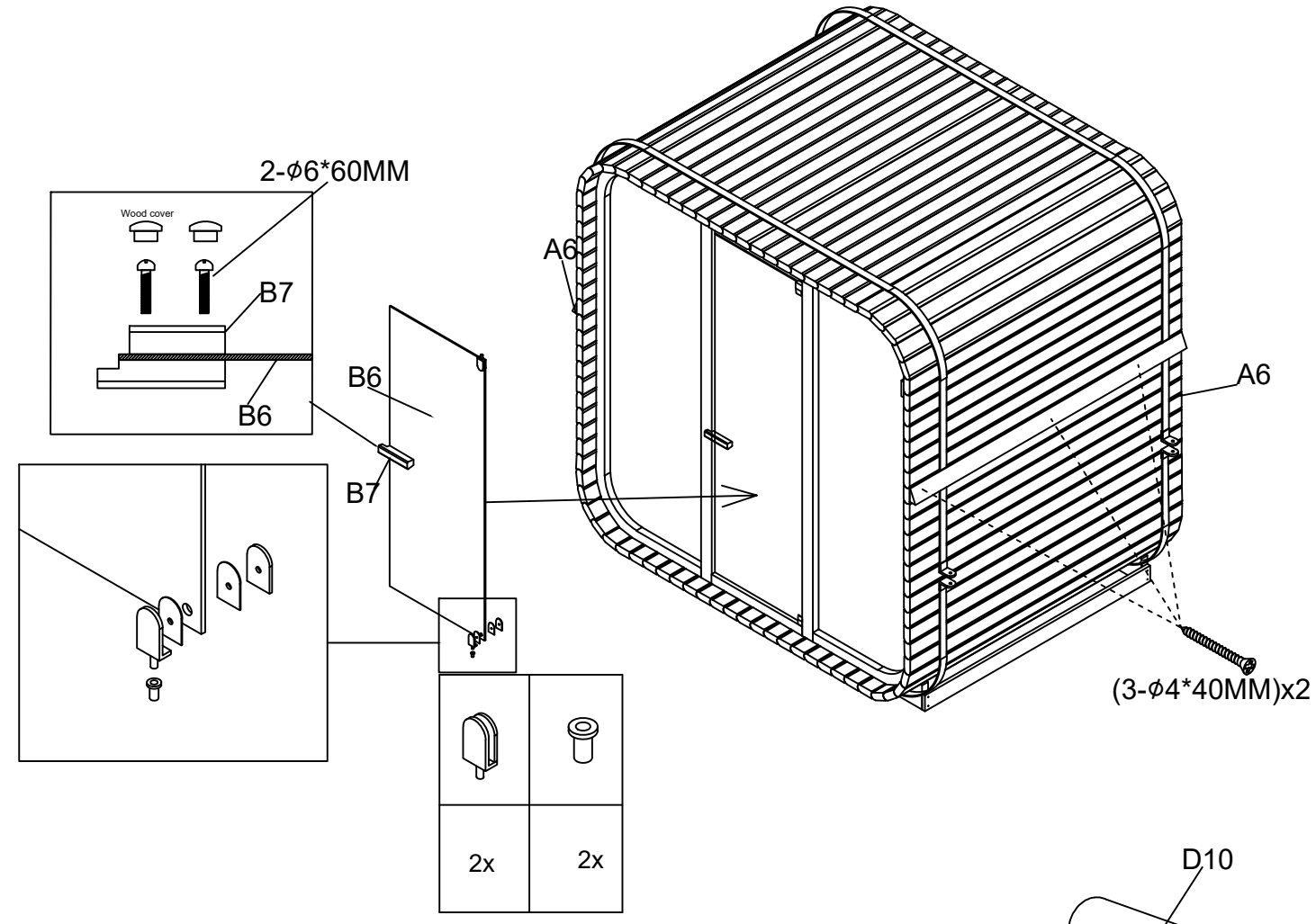
2-φ6*60MM
Wood cover
B7
B6
B6
B7
A6
A6
(3-φ4*40MM)x2
2x
2x

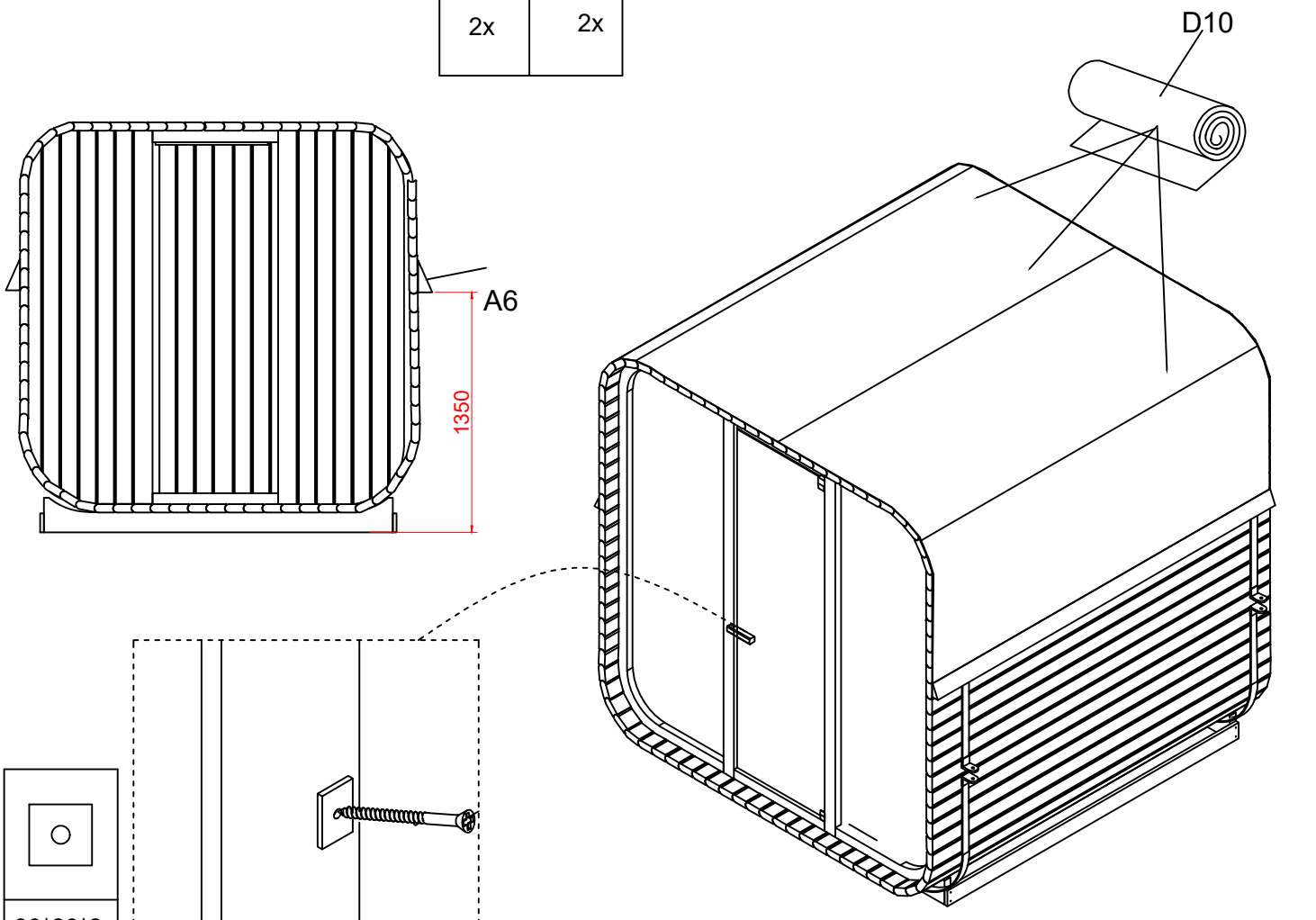
D10
A6
1350

30*20*2
1x
3*16MM

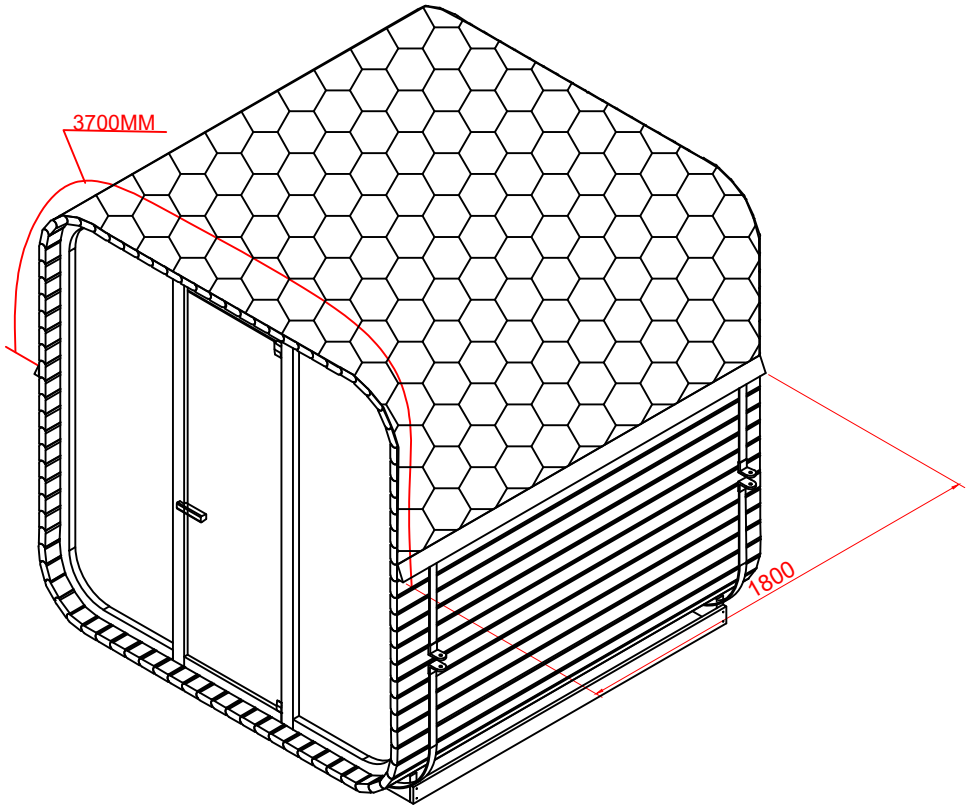
3700MM
1800

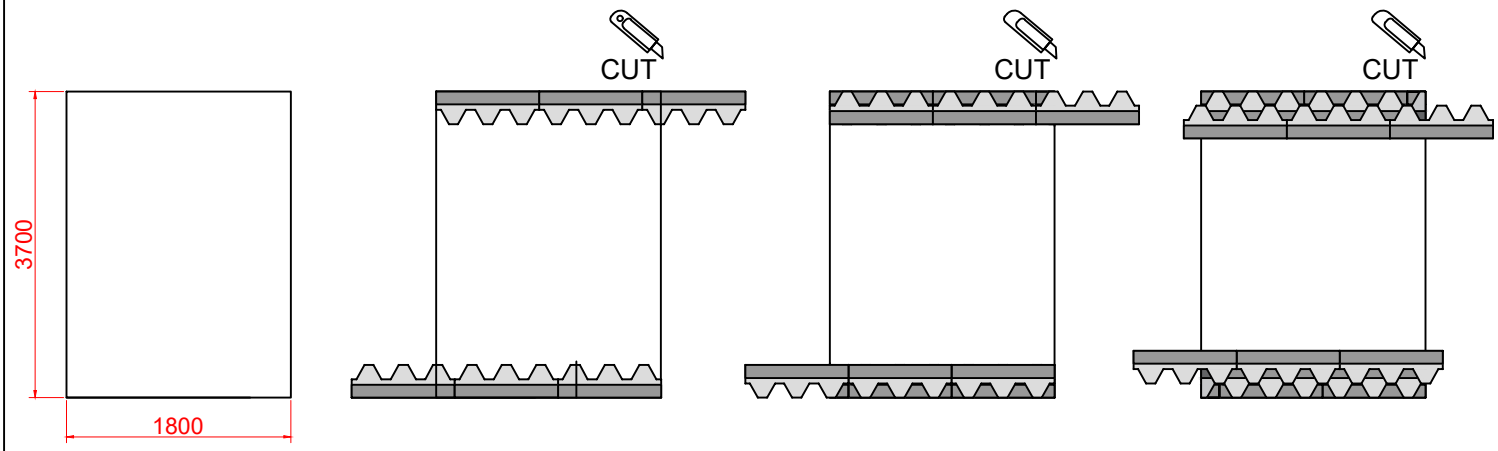
3700
1800
CUT
CUT
CUT

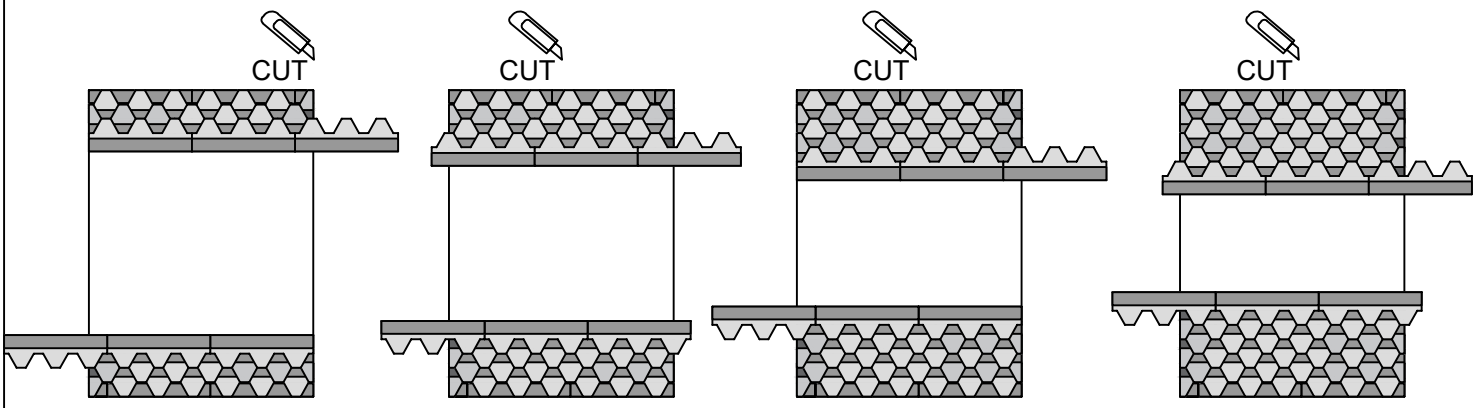
CUT
CUT
CUT
CUT

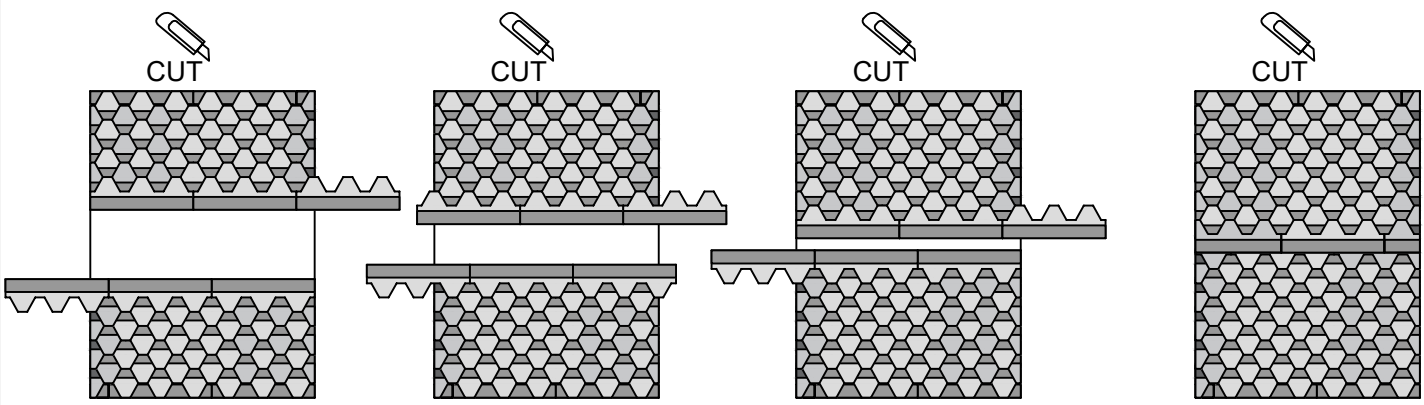
CUT
CUT
CUT
CUT

INSTALLATION MANUAL:FOR MODELS

SCA—30
SCA—45
SCA—60
SCA—80
SCA—90

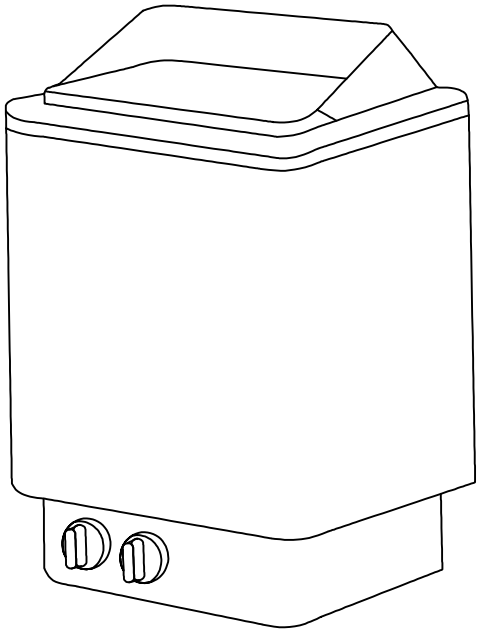

SAUNA HEATER

Use ordinary drinking water only, other materials poured into the stone compartment may damage the heating elements, which is beyond our guarantee

WARNNING :
PLEASE READ THIS MANUAL CAREFULLY BEFORE USE

SAUNA ROCKS

Load adequate sauna rocks (10-15kg) into the sauna heater after finishing the installation of sauna heater and controller.

ATTENTION:Sauna rocks must be of finest qualities because temperature inside sauna heater is extremely high. Rocks not be able to withstand heat and the great heat changes easily break or get crumbling and damage the heating elements, or are easily oxidized which in return counteract the heat circulation and damage the sauna heater while being heated or being thrown water to for vapors causes.

WARNING

1.Electrical shock hazard------there are no owner serviceable parts in sauna heater. To avoid electrical shock hazard, all installations and relevant services shall be performed by qualified personnel.

2.Sauna shall be less than half an hour. Bathing too long may cause heart beating too fast, light heartache, feeling weak or dizzy. Should the bather stop bathing immediately as soon as the above symptoms occur.

3.Sauna bath may cause tension to the bather. Thus, one who is one of the followings should be directed by physician:

A. Being pregnant B. Having heart disease C. Having high blood pressure D. Having circulation system disease E. After drinking

F. After taking medicine. G. Diabetes H. Not feeling well. 5. Risk of scald: Must not touch the sauna heater or trim during heating, as it is hot. Stay at least 30 cm away from the hot heater.

4.Children must be under the company of adult in taking sauna bath.

GUARANTEE

1. Control panel is under one year guarantee.
2. Main body of sauna heater is under one year guarantee.
3. The following situations are not guaranteed:

1) Installation or internal structure disassembling by unprofessional personnel
2) supply voltage fluctuation range ±10
3) unqualified rocks on sauna heater's compartment
4) installation without following the dimension instruction of manual

354SkSM 110A Power KW	Heating Elements 230V/240V				
	SEPC 62 1000W	SEPC 63 1500W	SEPC 64 2000W	SEPC 65 2670W	SEPC 63B 3000W
3.0	1, 2, 3				
4.5		1, 2, 3			
6.0			1, 2, 3		
8.0				1, 2, 3	
9.0				1	2, 3

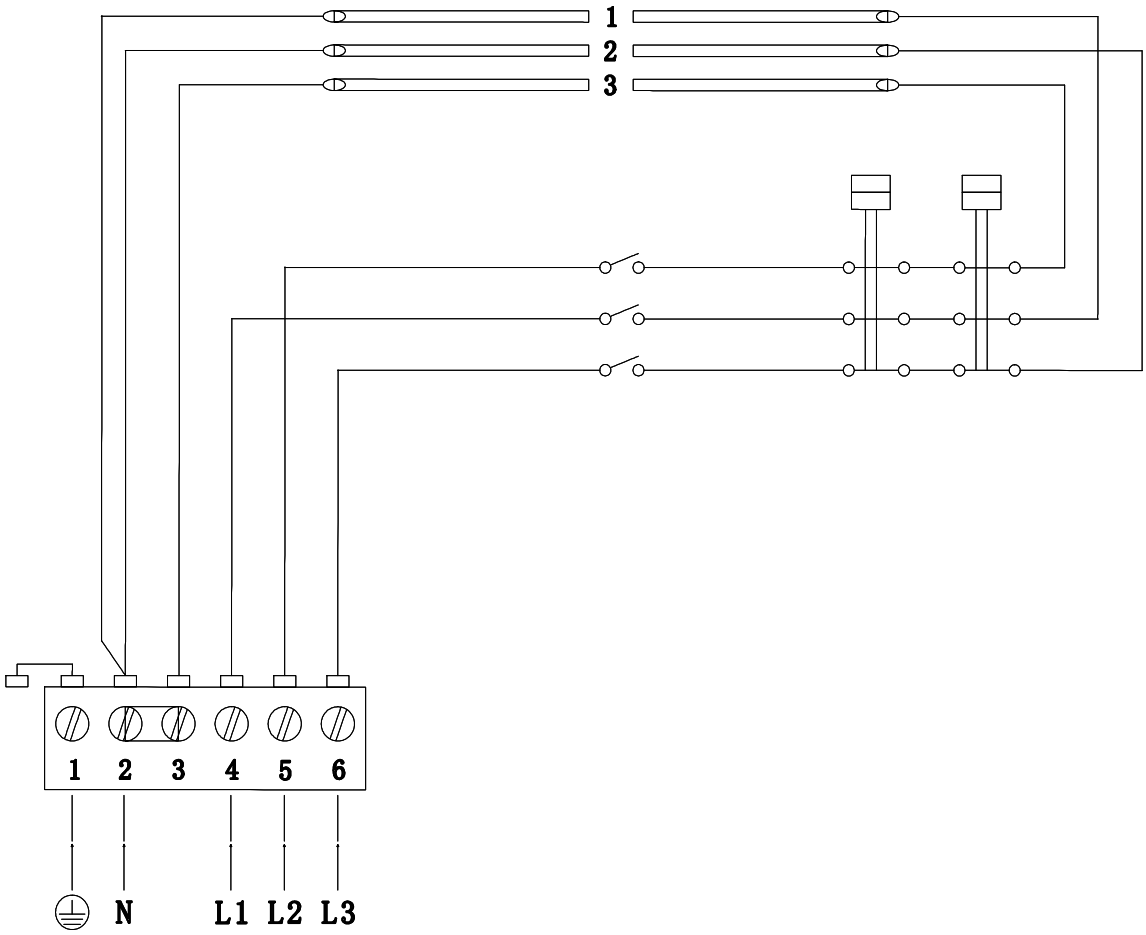

Figure 2

380V 3N~/415V 3N~

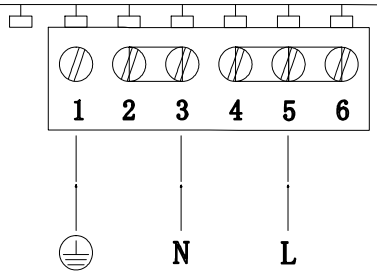

220V 1N~/240V 1N~ 4.5K/6.0mm²/3.0 2.5mm²

(1) L L1 L2 L3–Connection ports of live wire

(2) N----------Connection port of neuter wire

(3) ⏚ ----------Connection port of grounding wire

Figure 7

nstallation

Install the sauna heater onto the wall with the screw provided in the heater,according to the minimumsafety distances and volumes indicated in table 1 and figure 1, or on the plate of the heater.

------The heater can be installed in the wall recess at the minimum height of 1900mm.

------Do not cover the wall behind the heater with materials like asbestos or eternit plates etc,because this sort of covering protection could cause too temperature and a risk of burn.

------Must use qualified materials for the walls and ceiling.

Guard Rails

Please follow the minimum distances requirements in figure 6 if guardrails are desired around the heater.

Connection of Electricity Supply Cable

Only the qualified electrician may conduct the electricity supply connections of the heater′ s cables taking into consideration of current,valid electrical safety regulations.The connecting cables of the mains supply to the heater must be of REVE rubber insulated cables or at least an equivalent(see the figure 2).There are connection ports in the junction box in sauna heater to connect the indicating lamps outside sauna (see connection ports of circuit diagram in figure 7). The section of the connecting cables is same as the one of the heater.The electricity connection box in sauna room must be of a hermetic,splashing proof type with a 7mm diameter condensation hole.The junction box should not be more than 500mm over the floor.

Sauna stones

Since the sauna stones may be dusty,we recommend that they should be rinsed begore being loaded into the heater container; the largest ones should be loaded at the bottom.Do not load the stones too tight so that air can easily move between the stones whereby a good even cooling can be got for the heating elements.Reload when stones broken or crumbling so that these stones can be got out of the heater before the heating elements get damaged.The diameter of the stones is usually of 3-8 cm.

Temperature Control

The thermostat can control the temperature in an ideal condition(figure3).Sauna heater can reach o a preset temperature in 30 to 60 minutes depending on the size of sauna room Thermostat of three phases electricity can fulfill the preservation of a good even comfortable temperature in sauna room.

Power Switch

The power switch is the main power switch of sauna heaterwhich should be switched off while leaving sauna.

Ventilation

Good ventilation is a must for the sauna,and correctly installed ventilation creates agreeable bathing conditions,but yet still save energy.For the ventilation to be successful it is important where the ventilation openings are suited.The fresh air intake should be better situated on the wall near the bottom of the sauna heater.The diameter of air inlet must be at least 6 cm.

The exhaust opening should be better situated on the wall opposite to and as for as possible from the air intake.The diameter of the exhaust opening must be twice the size of the intake.

The exhaust opening must be situated under the botom of the upper benches.

Noted: the upper screws must be fastened tight, the minimum distances between screw head and wall must be 3mm.

Figure 1A

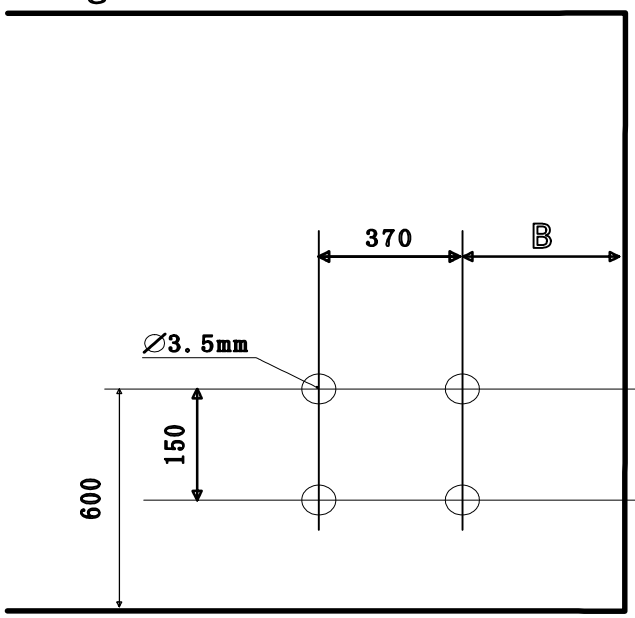

Figure 1B

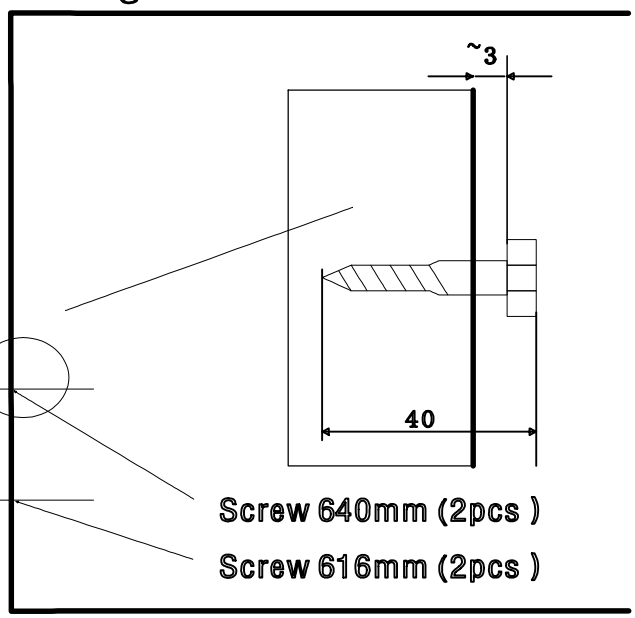

Figure 1C

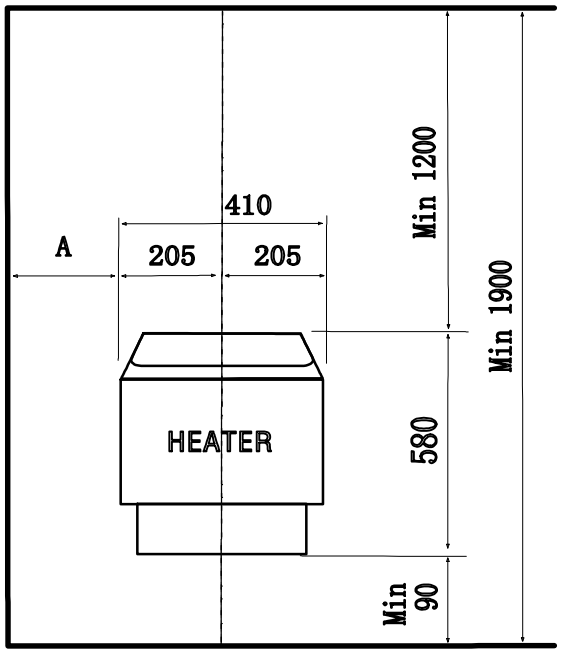

Figure 1D

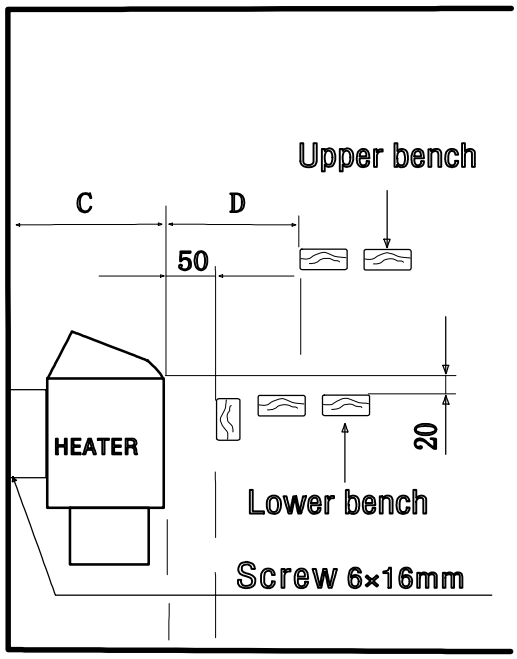

Figure 3

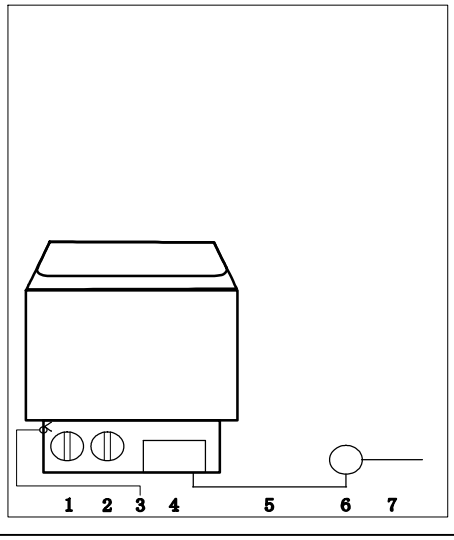

Table 1

HEATER	Distance (mm)		
	A	C	D
SCA-30	50	280	80
SCA-45	80	280	100
SCA-60	100	280	150
SCA-80	130	300	200
SCA-90	130	300	200

1、Power switch
2、Thermostat
3、Temperature limit reposition
4、Junction box
5、Electricity supply cable
6、Electricity connection box
7、Connecting cable

Figure 4

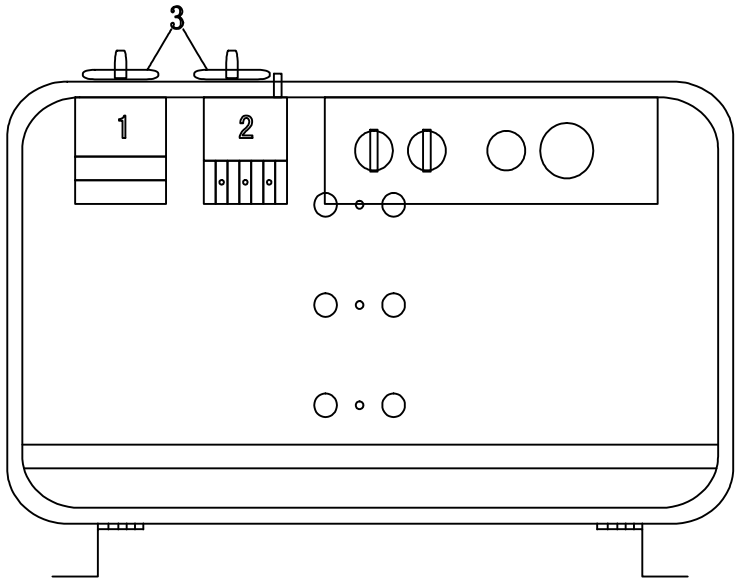

Figure 5

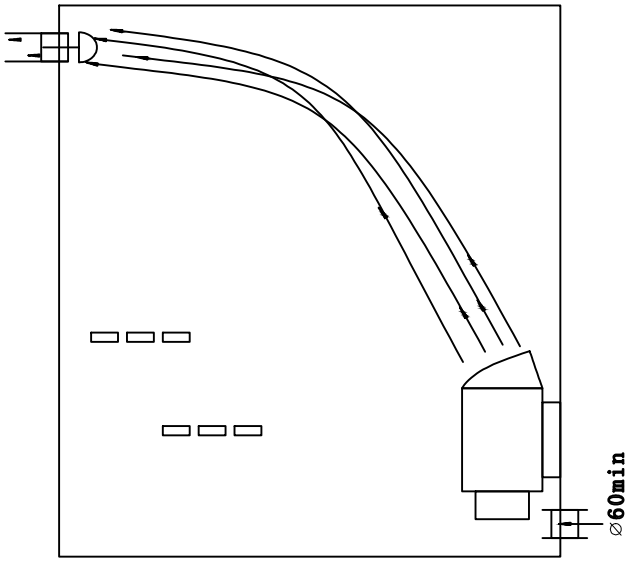

Figure 6

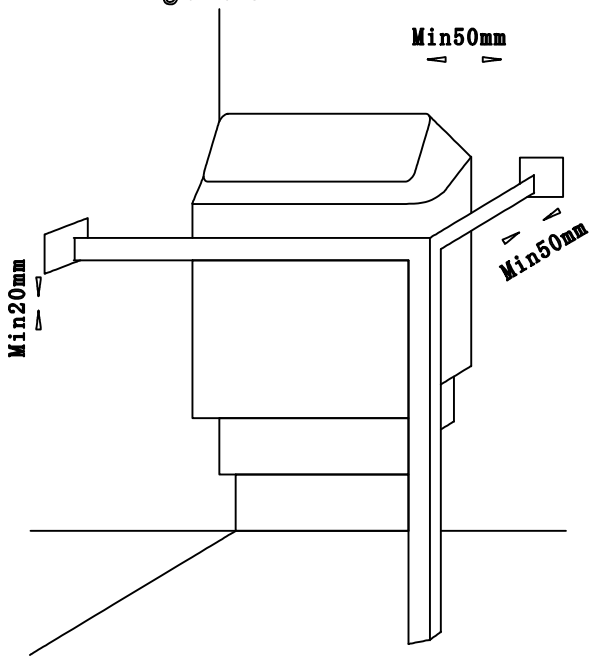

Table 2

Model	Power	Sauna Room			Minimum Distance From Heater to				Cables to	
	KW	Volume m^3 Min	Max	Height min. cm	Side & Back wall min. cm	If 500mm over from floor guard rail min cm	Ceiling min cm	Floor min. cm	380V 3ph 415V 3ph mm^2	220V 1ph 240V 1ph mm^2
SCA-30	3.0	2	4	190	5	5	110	18	5X1.5	3X2.5
SCA-45	4.5	3	6	190	8	8	110	18	5X1.5	6X6
SCA-60	6.0	5	9	190	10	15	110	18	5X1.5	3X10
SCA-80	8.0	8	12	190	13	20	110	18	5X2.5	3X10
SCA-90	9.0	9	13	190	13	20	110	18	5X2.5	

SERVICE

Use instructions

Drink plenty of liquids before and after use of the infrared cabin.

Dry yourself off completely.

The optimal cabin temperature for a pleasant session lies between 35 and 60 .

After a heating period of an hour at the latest, the cabin should be switched off and a heating brake of at least 30 minutes should be taken.

Maintenance instructions

Clean the cabin with a damp cotton towel, dry with a clean dry towel.

Clean the glass with a window/glass cleaner and a soft cloth.

Do not pour water in the control panel or clean it with wet cloth. For cleaning purposes, use a cleaning cloth that has been only slightly moistened with a mild soapy solvent (dish detergent).

Do not use chemical detergents to clean the cabin.

Please fasten the screws of the bench once every three months, avoid the loose or drop off.

It is recommended to take a warm shower and relax after use.

Notes:

_____

_____

_____

_____

_____